# Opyn - IP Entry System

STILL HAVING TROUBLE?
Find all of our support options such as Web Chat, Full Manuals, Customer Helpline and more on our website:
WWW.AESGLOBALUS.COM

* ALWAYS TEST THE UNIT ON SITE BEFORE INSTALLATION TO AVOID RESTOCKING FEES *

## Install Preparation

1

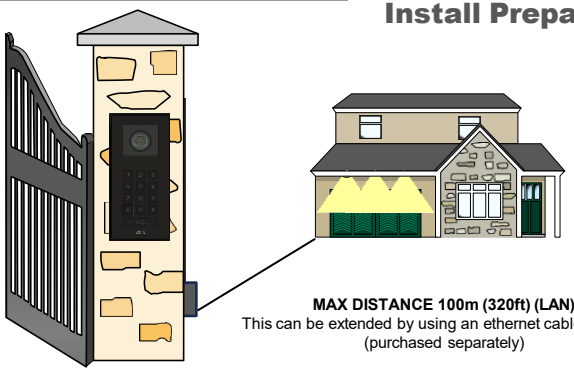

**MAX DISTANCE 100m (320ft) (LAN)**
This can be extended by using an ethernet cable extender (purchased separately)

We recommend a minimum UPLOAD speed of 1.5 Mbps!

The higher the upload speed the higher the quality of your video stream will be. However, you can adjust the video stream quality should you still find it dropping frames or a little slow.

## PCB

2

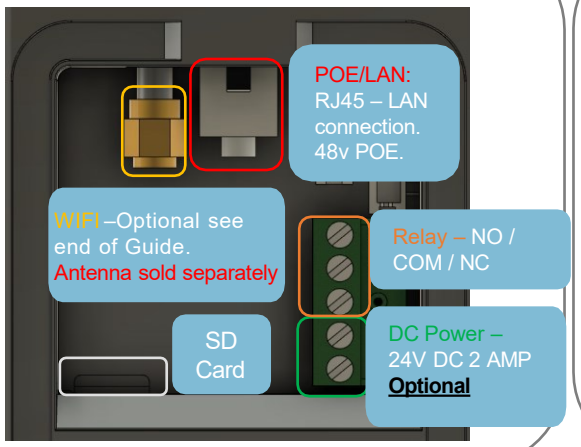


## POE Plug

3

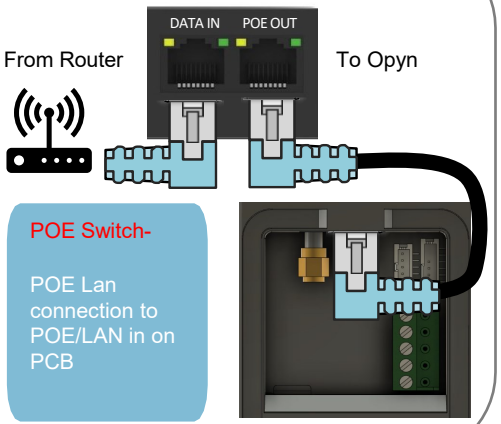


OR

## Relay 1

4

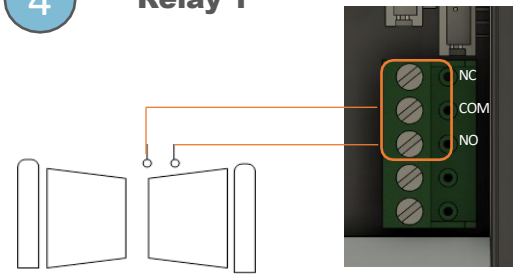


Power In – 24V DC 2 AMP
–
Supply sold Separately

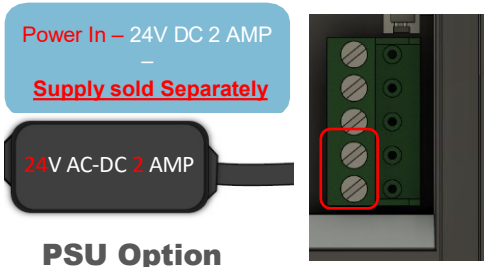


## PSU Option

## INGRESS PROTECTION

We recommend sealing all entry holes for prevention of insects that can cause issues with a risk of shorting out components.

To maintain the IP54 rating please follow the sealing instructions included. (also available online)

## POWER CABLE

If using Alternate Power Supply 24V 2 AMP Required.

**TIP:** Most technical calls received are due to installers using CAT5 or alarm cable to power the unit.

**NEITHER** are rated to carry enough power! **( 1.2amp peak )**

*Please use the following cable:*

Up to 2 metres ( 6 feet ) – Use minimum **0.5mm²** **( 18 gauge )**
Up to 4 metres ( 12 feet ) – Use minimum **0.75mm²** **( 16 gauge )**
Up to 8 metres ( 24 feet ) – Use minimum **1.0mm²** **( 14 gauge )**

**Power Consumption:**
Standby = 170mA
Max = 300mA

***IMPORTANT***
**Please use only one method to power device**

## Relay 2 and exit button

4

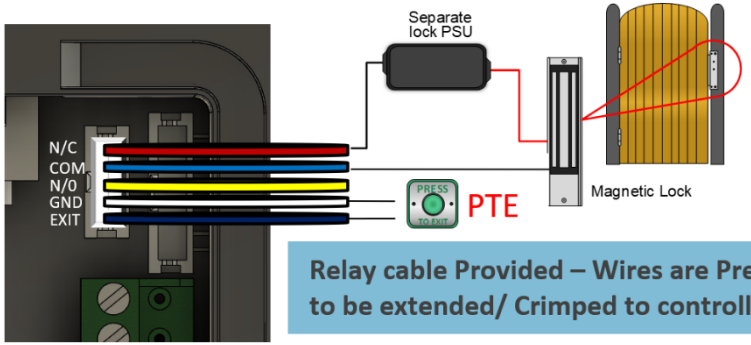


**Relay cable Provided – Wires are Pre-cut to be extended/ Crimped to controller**

EXTRA RESOURCES

**NEED MORE ASSISTANCE?**
**+1 (321) 900 4599**
SCAN THIS QR CODE TO BE BROUGHT TO OUR RESOURCES PAGE.
VIDEOS | HOW-TO GUIDES | MANUALS | QUICK START GUIDES

STILL HAVING TROUBLE?
Find all of our support options such as Web Chat, Full Manuals, Customer Helpline and more on our website:
WWW.AESGLOBALUS.COM

* ALWAYS TEST THE UNIT ON SITE BEFORE INSTALLATION TO AVOID RESTOCKING FEES *

## Install

*Seal any unused drill holes to avoid any ingress*

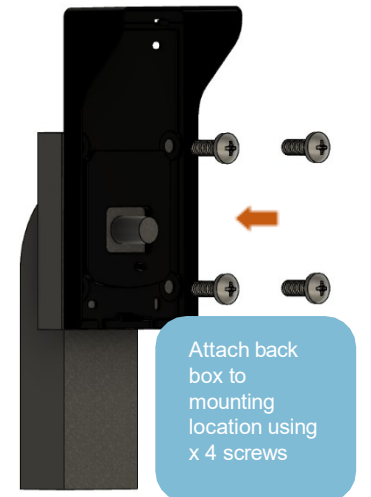

Attach back box to mounting location using x 4 screws

Before attaching the front, scan or take photo of the "QR Code" for device to app pairing

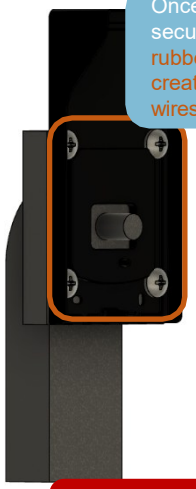

Once back box secured attach rubber gasket and create opening for wires

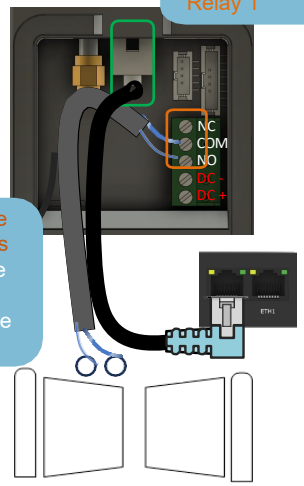


POE power

Relay 1

Ensure wire connections are in place before securing the front

Seal all Mounting or cable holes by using sealant such as silicone to Prevent water or bug ingress

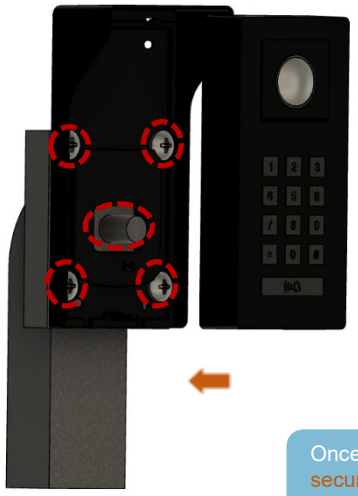

Once complete secure front to back box

## POWER CABLE

KEEP POWER SUPPLY AS CLOSE AS POSSIBLE.

**TIP:** Most technical calls received are due to installers using CAT5 or alarm cable to power the unit.

**NEITHER** are rated to carry enough power! **( 1.2amp peak )**

*Please use the following cable:*

Up to 2 metres ( 6 feet ) – Use minimum **0.5mm²** **( 18 gauge )**
Up to 4 metres ( 12 feet ) – Use minimum **0.75mm²** **( 16 gauge )**
Up to 8 metres ( 24 feet ) – Use minimum **1.0mm²** **( 14 gauge )**

***IMPORTANT***
**Please use only one method to power device**
**POE OR PSU**

We recommend sealing all entry holes for prevention of insects that can cause issues with a risk of shorting out components.

To maintain the IP54 rating please follow the sealing instructions included. (also available online)

Alexa & Google Home Integration
See page 7 for instructions

LIGHTNING PRONE AREAS MUST USE SURGE PROTECTION FOR POWER SUPPLY!

EXTRA RESOURCES

NEED MORE ASSISTANCE?
+1 (321) 900 4599
SCAN THIS QR CODE TO BE BROUGHT TO OUR RESOURCES PAGE.
VIDEOS | HOW-TO GUIDES | MANUALS | QUICK START GUIDES

# Robustel - IP Intercom

STILL HAVING TROUBLE?
Find all of our support options such as Web Chat, Full Manuals, Customer Helpline and more on our website:
WWW.AESGLOBALUS.COM

* ALWAYS TEST THE UNIT ON SITE BEFORE INSTALLATION TO AVOID RESTOCKING FEES *

## Setup 4G Router

4G

APN (or Access Point Name) settings contain information that's needed to make data connections and provide an internet connection for your IP intercom.

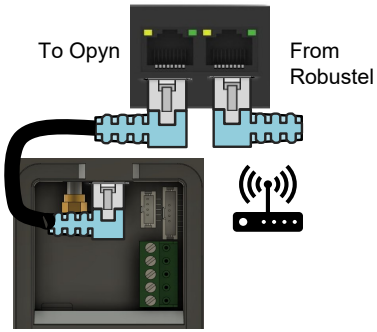


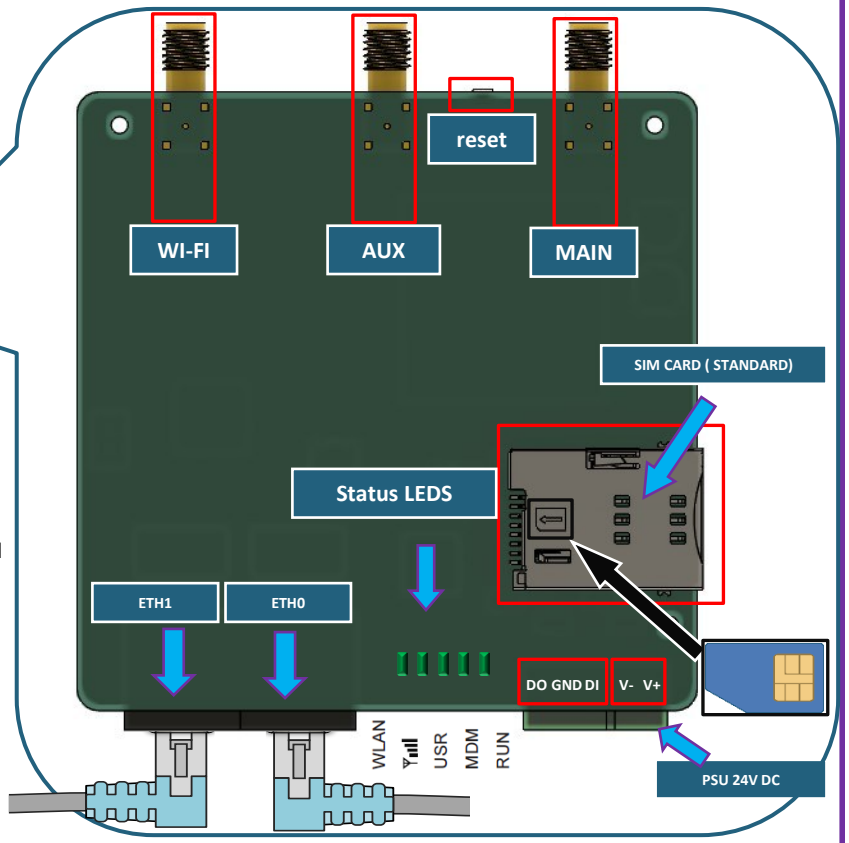


IP Address: **192.168.0.1**

**Password : Aesglobal!23**

**Note:** If you wish to use a different network then the APN settings need changed. This will require a computer with a RJ45 LAN port connection.

**Computer Required!**

Note : More Detail on Robustel available on our Resource page

## SIM ORIENTATION

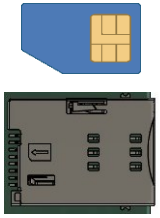

**ALWAYS** ensure that the system is switched **OFF** any time you are adding or removing the SIM card and also ensure that the orientation is correct before powering the router back on.

***STANDARD SIM SIZE ONLY***

## PCB BOOT STATUS LEDS

When the PCB has successfully booted up you should have activity on all 3 LEDs:

**RUN:** Constant ON = **Initializing**| **Blinking - Working** Constant **OFF** = **PCB Powered OFF**
**MDM:** Steady solid = **Working**| **Blinking = Data sent/recieved** Constant **OFF** = **Not Connected**
**USR: OPTIONAL** – User Programmable LED. May remain OFF if no function has been assigned. This is normal
**RSSI (Represented by five bars signal.):** Steady solid = **Strong signal**| **Blinking = Medium signal** Constant **OFF** = **Low/no Signal**
**WLAN:** Steady solid = **Wi-Fi is working** Constant **OFF** = **Not Connected**

## DATA TRANSFER LEDS

The 2 LEDs behind LAN 1 Port will flash **GREEN** when you have connection activity.

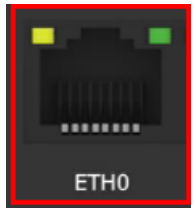


## - ATTENTION! -

This module will come the APN pre-set for the AES SIM that is provided with the unit. Once the SIM has been setup with a data package then this module will provide an internet connection for the main PCB.

Please contact support if you need assistance programming a different APN for another network.

**+1 (321) 900 4599**

EXTRA RESOURCES

**NEED MORE ASSISTANCE?**

**+1 (321) 900 4599**

SCAN THIS QR CODE TO BE BROUGHT TO OUR RESOURCES PAGE.

VIDEOS | HOW-TO GUIDES | MANUALS | QUICK START GUIDES

STILL HAVING TROUBLE?
Find all of our support options such as Web Chat, Full Manuals, Customer Helpline and more on our website:
WWW.AESGLOBALUS.COM

* ALWAYS TEST THE UNIT ON SITE BEFORE INSTALLATION TO AVOID RESTOCKING FEES *

1 Download the programming/user app. 'AES OPYN'

AES Opyn

Note: Slight differences will be seen between the Android and iOS app versions, any major differences will be highlighted in the screenshots below.

App download

## Add Intercom to Device (LAN)

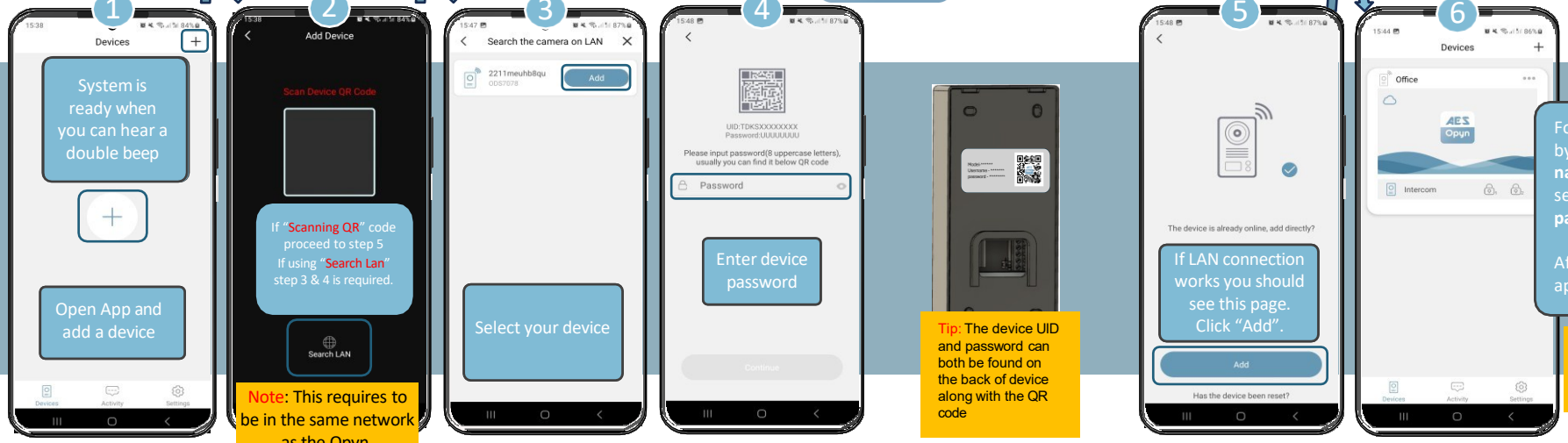


## Add Keypad or QR Code *The process for creating Keypad or QR codes is the same

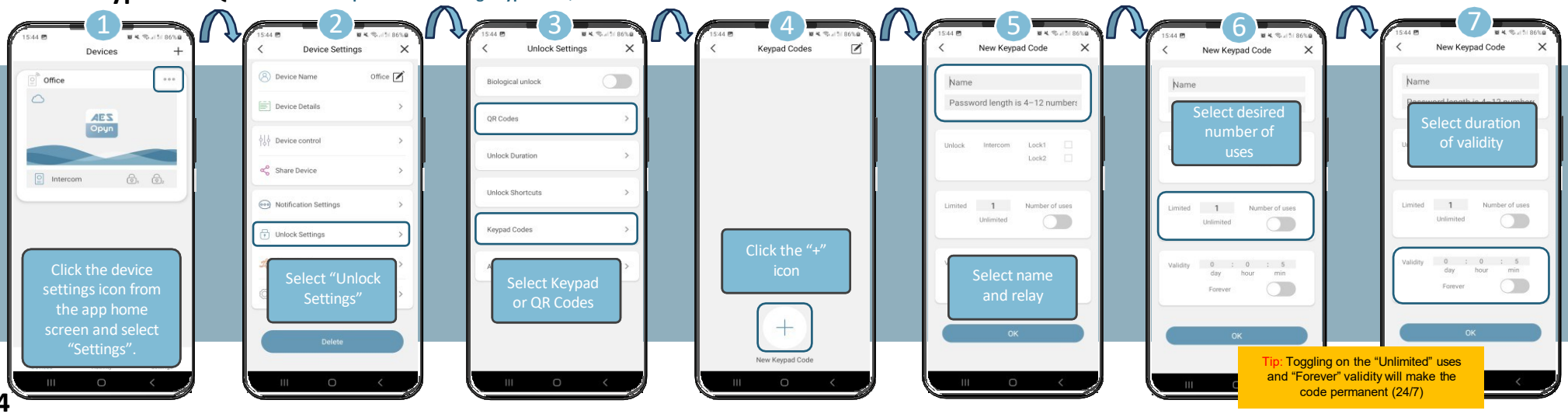

STILL HAVING TROUBLE?
Find all of our support options such as Web Chat, Full Manuals, Customer Helpline and more on our website:
WWW.AESGLOBALUS.COM

* ALWAYS TEST THE UNIT ON SITE BEFORE INSTALLATION TO AVOID RESTOCKING FEES *

Download the programming/user app. 'AES OPYN'

Note: Slight differences will be seen between the Android and iOS app versions, any major differences will be highlighted in the screenshots below.

App download

## Test Keypad Code

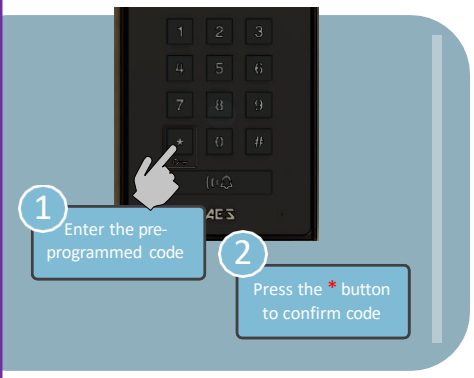


## Hold Open Relay

Note: To disable this function simply press the same icon again.

## Change Unlock Duration

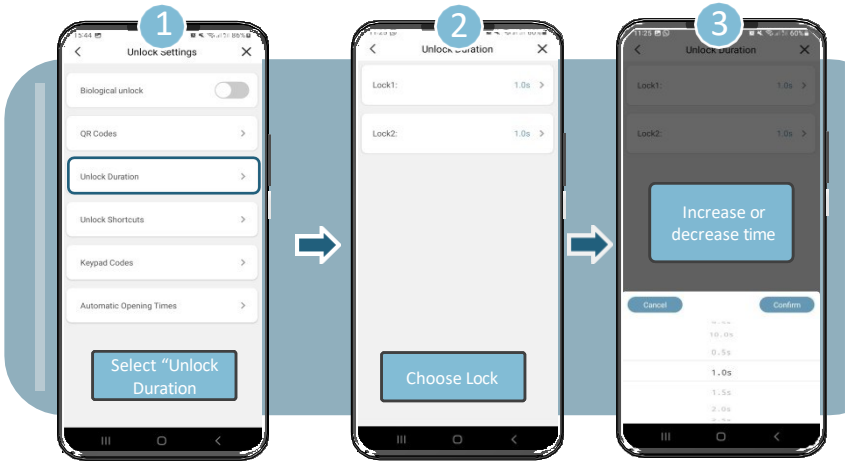


## Additional Android Settings

**Note:** Call may appear in one of two ways depending on phone type, software version, settings and more.

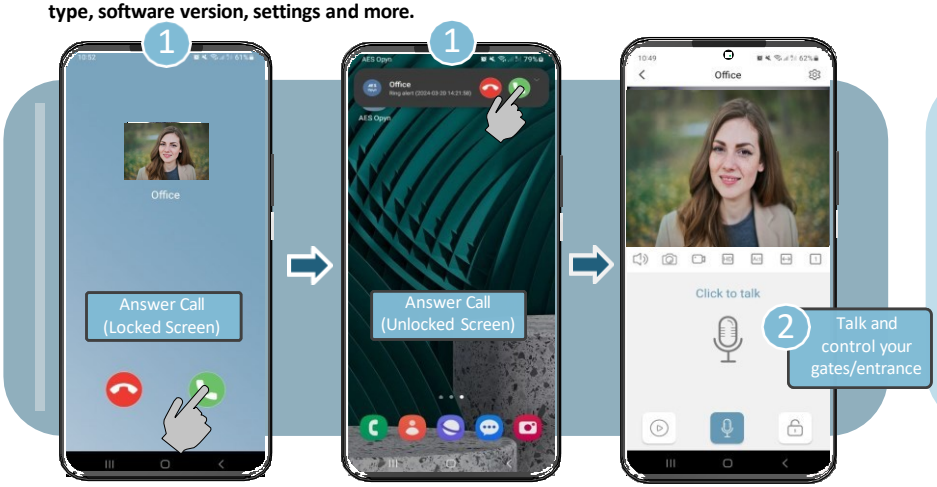


## Answering on iOS (Apple)

**Note:** Call may appear in one of two ways depending on phone type, software version, settings and more.

Note: Various versions of IOS and Android OS will have different notification acceptance techniques. Please refer to online support for your device if needed.

STILL HAVING TROUBLE?
Find all of our support options such as Web Chat, Full Manuals, Customer Helpline and more on our website:
WWW.AESGLOBALUS.COM

* ALWAYS TEST THE UNIT ON SITE BEFORE INSTALLATION TO AVOID RESTOCKING FEES *

Note: Slight differences will be seen between the Android and iOS app versions, any major differences will be highlighted in the screenshots below.

App download

## Sharing Device – Search Account

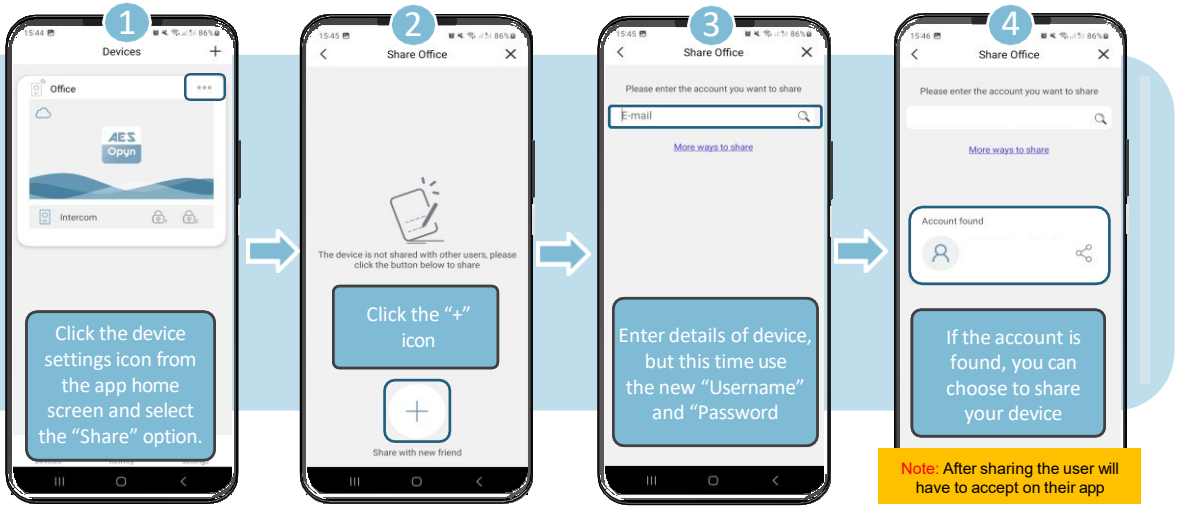


Note: After sharing the user will have to accept on their app

## Sharing Device – QR Code

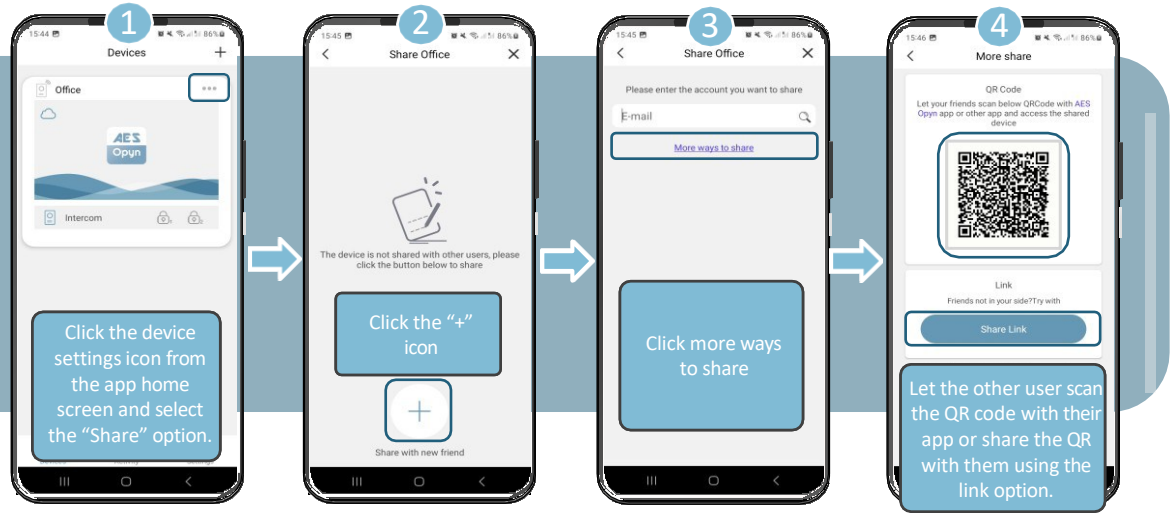


## INTERCOM MAINTENANCE

Bug ingress is a common issue in unit failures. Ensure that all components are sealed accordingly and check occasionally. (Do not open the panel in the rain / snow unless correctly equipped to keep the internals dry. Ensure the unit is securely closed after maintenance)

## ENVIRONMENTAL INFORMATION

The equipment that you bought has required the extraction and use of natural resources for its production. It may contain hazardous substances for the environment. In order to avoid the dissemination of those substances in our environment and to diminish the pressure on the natural resources, we encourage you to use the appropriate take-back systems. Those systems will reuse or recycle most of the materials of your end-of-life equipment.

The crossed-bin symbol marked in your device invites you to use those systems.

If you need more information on the collection, reuse and recycling systems, please contact your local or regional waste administration. You can also contact AES Global Ltd for more information on the environmental performances of our products.

## WARRANTY

Please note, by installing this product, you are accepting the following warranty terms:

1. The manufacturer's warranty is a "return to base" 2-year warranty from date of manufacture. This means that any suspected defective components or items are returned to the manufacturer's agent for investigation and diagnosis and returned at the cost of the customer.

2. The warranty does not cover, nor is the manufacturer or agent responsible for any of the following whatsoever: Storm damage, lightning or surge damage, flooding, accidental damage, vandalism or deliberate damage, un-explained corrosion or unusually harsh environments, failure of telephone networks, future un-interoperability between the product and network providers which cause mal-function due to changes implemented by the phone providers after manufacture of the product, or that which is outside of control of the manufacturer (e.g. 2G, 3G switch off, removal or inability to obtain VOLTE service), and damage due to not proper installation.

3. The manufacturer in no way accepts liability for any of the following incurred due to a product defect: Cost of attending site, inconveniences, labour rates, time lost, loss to or damage to property, security breaches, late payment clauses or breaches of any contracts between the installer and the client.

4. This is a profession install product only. The product is a component of an overall system. Therefore, it is the responsibility of the installer to certify the safety and compliance of the overall finished system. As soon as this product is fixed to another item, or connected to another third-party device, then the product has been modified, and compliance with local regulations in the country of install is strictly the responsibility of the installer.

5. Re-stocking fees may apply to items returned that are found to be non-defective. Complete units will also attract a re-stocking fee if returned for credit, regardless if a defect is discovered or not. Re-stocking fees may vary depending on the condition of the item being returned, and whether it can be determined as in brand new condition. The warranty terms do not entitle customers to an automatic full refund. For more details on returns procedures and re-stocking fees, contact the agent.

6. Items with physical signs of surge damage are not covered by warranty. Items with visible signs of surge damage will only be covered by warranty if photographic evidence is provided from site, showing surge protection has been installed.

Full warranty terms and conditions available upon request to AES Technical Department.

# Alexa & Google Integration Instructions

## • Alexa

1. Download the “AES Opyn” app via Google Play or App Store.
2. Launch the app and register an account (or login if you have already registered)
3. Connect and set up your AES Opyn device(s) via the app.
4. Search for the “AES Opyn” skill in the “Amazon Alexa” app skill directory.
5. Click “Enable” and proceed to link your AES Opyn and Amazon account.
6. Once successfully linked you can add your device(s) using the “discover devices” option on the Alexa app.
7. After adding the device(s) you can rename them to your liking and start using the voice control commands.

## • Google

1. Download the “AES Opyn” app via Google Play or App Store.
2. Launch the app and register an account (or login if you have already registered)
3. Connect and set up your AES Opyn device(s) via the app.
4. Search for the AES Opyn service in the “Google Home”, home control service directory.
5. Connect/Link your AES Opyn and Google Home accounts.
6. The Opyn devices you had connected to your “Opyn” app should then automatically appear in your Google Home app.

## 1 Download the programming/user app. 'AES OPYN'

Note: Slight differences will be seen between the Android and iOS app versions, any major differences will be highlighted in the screenshots below.

# Add Intercom to Device WIFI ( Antenna sold separately )

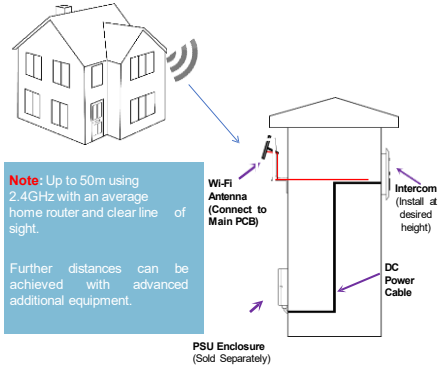


Note: Up to 50m using 2.4GHz with an average home router and clear line of sight.

Further distances can be achieved with advanced additional equipment.

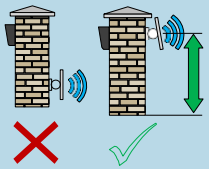

Mount the antenna as high as possible and away from obstructions such as vehicles, shrubs and trees to maximize signal strength.
Do NOT mount antenna at ground level.

I have some WiFi signal at the gate with my phone! If not, STOP. Use LAN/CAT5 cable!

My WiFi Internet Security is WPA, WPA2, WPA3 or better.

## 2

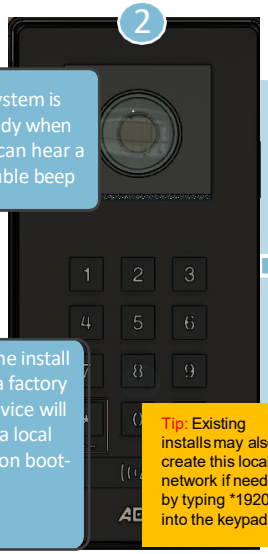

System is ready when you can hear a double beep

If first time install or after a factory reset, device will create a local network on boot-

Tip: Existing installs may also create this local network if needed by typing *1920# into the keypad

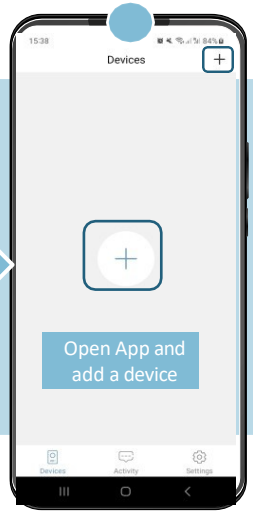


Open App and add a device

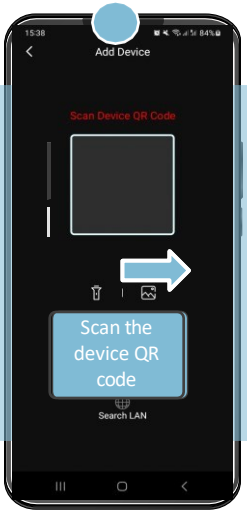


Scan the device QR code

Tip: The QR code can be found on the back of the device.

## 4

Ensure local network is active

## 5

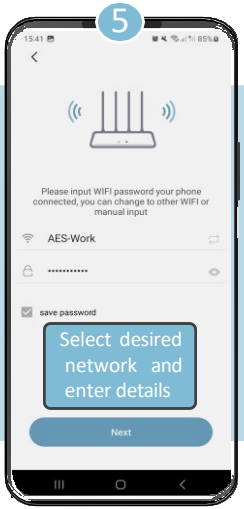


Select desired network and enter details

## 6

Wait for system to bind and connect

## 7

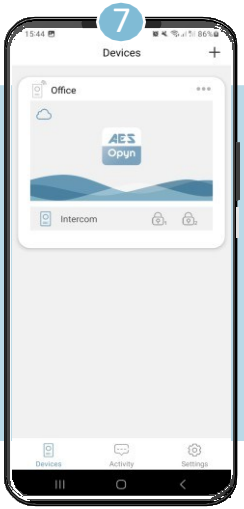


Follow the steps provided by the app, such as **naming** the device and setting the **admin password**.

Afterwards device should appear **online** like this.

Tip: If admin password is lost/forgotten only way to reset is to default the system.

## Reset / Default Device

If you need to default the system back to factory settings this can be done by entering the reset code sequence into the keypad.

**Default Sequence: *1590#**

(Note: THIS MUST BE CHANGED WHEN INSTALL IS COMPLETE)

## Unbind Device

If you wish to clear the device of all users and do not have access to their app you can delete them manually by entering the unbind code sequence into the keypad.

**Default Sequence: *1910#**

(Note: This will remove admin and all shared users)

## Change "Reset Code"

If you wish to change the reset code from its default value this can be done entering the following sequence into the keypad

**Sequence: Sequence: XXXX#CODE# (XXXX = Current Code, CODE = New Code)**

(Note: If you lose or forget this code a master reset on the system will be needed)

## Create Local Network

If you need to configure WIFI again due to changing router or network password, but device is already "offline" then use this sequence to create local network used in setup.

**Sequence: *1920#**

(Note: This will not remove any programming)

## Master Reset

**Press tamper alarm button 5 times in quick succession – wait 2 mins before power cycle**

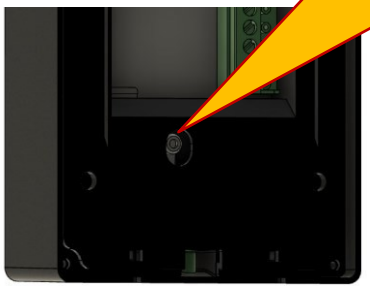

If you need to default the system and do not know the reset code due to it being changed from its default value, you can use this process to fully reset the system.

Note: Performing this process will remove all current programming including saved users & access codes.

Manufacturer: Advanced Electronic Solutions Global Ltd
Address: Unit 4C, Kilcronagh Business Park, Cookstown, Co Tyrone, BT809HJ, United Kingdom

Complies with the following essential requirements for 2014/53/EU:
EN 301 489-1 V2.2.0 (2017-03) (Electro-Magnetic compliance)
EN 301-489-17 V3.2.0 (2017-03) (Electro-Magnetic compliance)
EN 62479:2010 (Maximum output power)
EN60950-1:2006+A11:2009+A1:2010+A12:2011+A2:2013 (Electrical Safety)

Notified body: Shenzhen HUAK Testing Technology Co., Ltd.
CNAS Number: L9589
This declaration is issued under the sole responsibility of the manufacturer.

Signed by:

Paul Creighton, Managing Director.
Date: 18th July 2024

FCC ID: 2ALPX-OPYNIPIBK

Grantee: Advanced Electronic Solutions Global Ltd

This device complies with Part 15 of FCC rules. Operation is subject to the following two conditions: (1) this device may not cause harmful interference, and (2) this device must accept any interference received, including interference that may cause undesired operation.

Output power listed is conducted. This device must be installed to provide a separation distance of at least 20 cm from all persons and must not be co-located or operating in conjunction with any other antenna or transmitter.

RF Exposure Statement
To maintain compliance with FCC's RF Exposure guidelines, This equipment should be installed and operated with minimum distance of 20cm the radiator your body. This device and its antenna(s) must not be co-located or operation in conjunction with any other antenna or transmitter

STILL HAVING TROUBLE?
Find all of our support options such as Web Chat, Full Manuals, Customer Helpline and more on our website:

WWW.AESGLOBALUS.COM
+1 (321) 900 4599



Note: For legal reasons, telephone support by AES Global is for registered and qualified product installers only. Home owners and end-users should contact their installer/dealer for direct product technical support.